Cell Specification Data

SLPB 483459

Kokam Co., Ltd.

Cell Specification

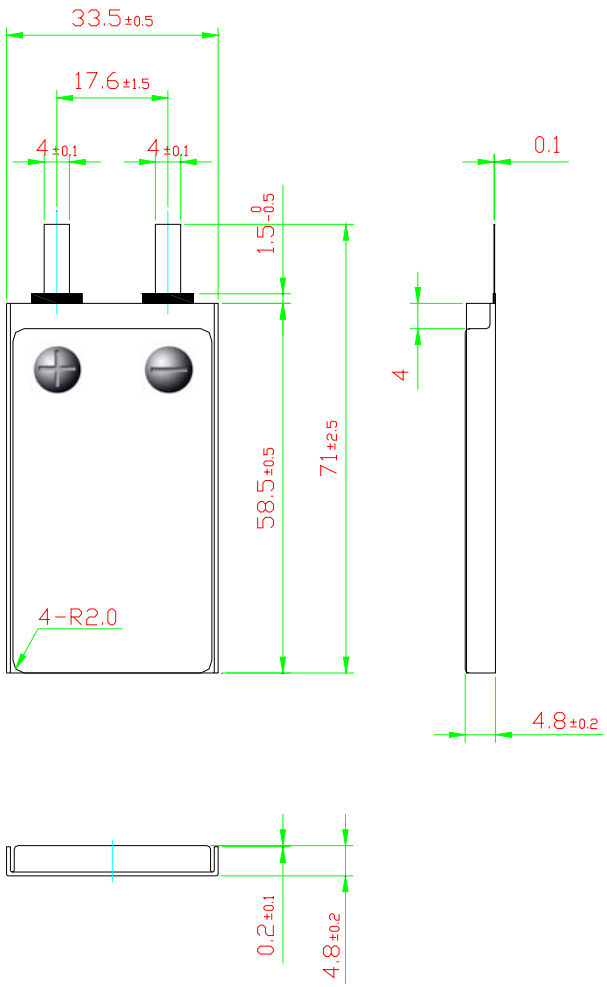

Typical Capacity[1)]		930 mAh
Nominal Voltage		3.7 V
Charge Condition	Max. Current	930 mA
	Voltage	4.2V ± 0.03V
Discharge Condition	Continuous Current	1.86 A
	Peak Current	4.65 A
	Cut-off Voltage	2.7 V
Cycle Life		> 500 Cycles
Operating Temp.	Charge	0 ~ 40 ℃
	Discharge	-20 ~ 60 ℃
Dimension	Thickness (mm)	4.80 ± 0.2
	Width (mm)	33.5 ± 0.5
	Length (mm)	58.5 ± 0.5
Weight (g)		18.0 ± 2.0

1) Typical Capacity : 0.5C, 4.2~3.0V @25°C,